2MP CMOS IR Dome Camera

Key Features

- 2 Megapixel high-performance CMOS
- Analog HD output, up to 1080P resolution
- True Day/Night, Smart IR
- Up to 20m IR distance
- OSD menu
- Up the Coax(HIKVISION-C protocol)

Specifications

Camera	
Image Sensor	2MP CMOS Image Sensor
Signal System	PAL/NTSC
Effective Pixels	1930(H)*1088(V)
Min. illumination	0.01 Lux @ (F1.2,AGC ON),0 Lux with IR
Shutter Time	1/25(1/30)s to 1/50,000s
Lens	2.8mm
	Angle of View: 91.3°(3.6mm), 59.9°(6mm)
Lens Mount	M12
Day & Night	ICR
Angle Adjustment	Pan: 0 - 350°, Tilt: 0 - 70°, Rotation: 0 - 350°
Synchronization	Internal synchronization
Video Frame Rate	1080p@25fps/1080p@30fps
HD Video Output	1 Analog HD output
S/N Ratio	＞62dB
Menu	
Camera ID	On/off (0-255)
AGC	Support
D/N Mode	Color/BW/Auto/EXT
White Balance	Auto/User/Push/8000K/6000K/4200K/3000K
Privacy Mask	On/Off, maximum 2 zones
Motion Detection	On/Off, maximum 4 zones
BLC	Support
Anti-flicker	On/Off
Language	English/Chinese
Functions	Digital noise reduction, Mirror
General	
Operating Conditions	-20 ℃ - 45 ℃ (-4 ℉ - 113 ℉) , Humidity 90% or less (non-condensing)
Power Supply	12 VDC±15%
Power Consumption	Max. 4W
IR Range	Up to 20m
Communication	Up the coax, Protocol: HIKVISION-C(TVI output)
Dimensions	Φ 98 x 65.4 mm (ϕ 3.86” x 2.57”)
Weight	240 g

Dimensions

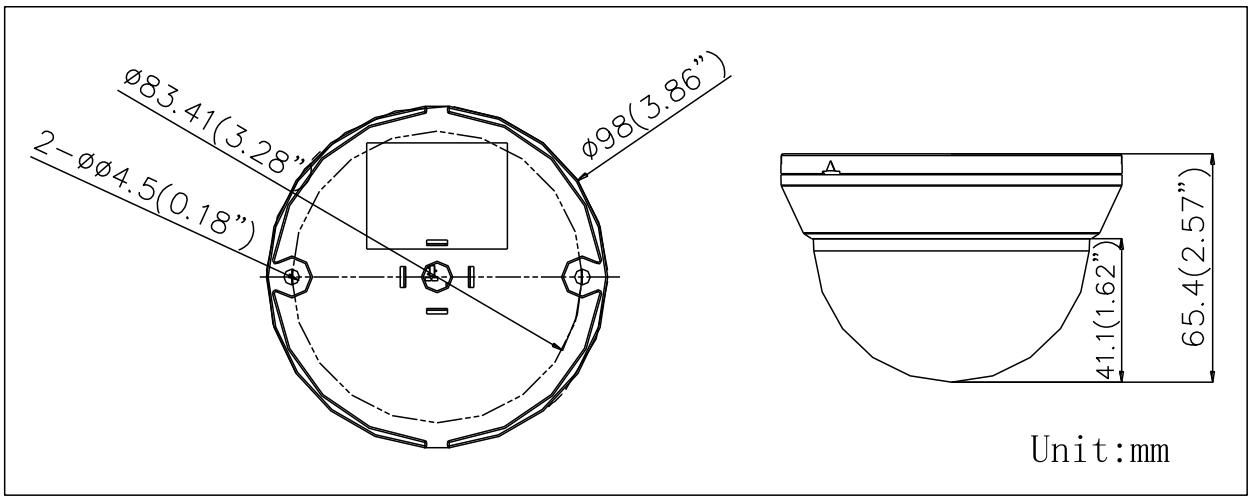

Accessories

Video Balun

TVI Tester